Leaky conical surfaces: spectral asymptotics, isoperimetric properties, and beyond

V. Lotoreichik

in collaboration with
J. Behrndt, P. Exner, and T. Ourmiéres-Bonafos

Nuclear Physics Institute, Czech Academy of Sciences, Řež

Ostrava, 02.06.2016

Outline

Hamiltonian

Hamiltonian

Notations

(i) $d \geq 2$ – space dimension and $\Sigma \subset \mathbb{R}^d$ – hypersurface.

(ii) $\alpha > 0$ – coupling constant.

Hamiltonian

Notations

(i) $d \geq 2$ – space dimension and $\Sigma \subset \mathbb{R}^d$ – hypersurface.

(ii) $\alpha > 0$ – coupling constant.

Typically, some assumptions on the smoothness of Σ are imposed.

Hamiltonian

Notations

(i) $d \geq 2$ – space dimension and $\Sigma \subset \mathbb{R}^d$ – hypersurface.

(ii) $\alpha > 0$ – coupling constant.

Typically, some assumptions on the smoothness of Σ are imposed.

Schrödinger operator with δ-interaction of strength α supported on Σ

$\mathsf{H}_\alpha^\Sigma := -\Delta - \alpha\delta(x - \Sigma)$ on $\mathbb{R}^d$.

Hamiltonian

Notations

(i) $d \geq 2$ – space dimension and $\Sigma \subset \mathbb{R}^d$ – hypersurface.

(ii) $\alpha > 0$ – coupling constant.

Typically, some assumptions on the smoothness of Σ are imposed.

Schrödinger operator with δ-interaction of strength α supported on Σ

$\mathsf{H}_\alpha^\Sigma := -\Delta - \alpha\delta(x - \Sigma)$ on $\mathbb{R}^d$.

H_α^Σ models 'leaky' quantum systems; a particle is confined to Σ but the tunnelling between different parts of Σ is not neglected.

Quantum graphs and waveguides do not explain this effect.

Hamiltonian

Notations

(i) $d \geq 2$ – space dimension and $\Sigma \subset \mathbb{R}^d$ – hypersurface.

(ii) $\alpha > 0$ – coupling constant.

Typically, some assumptions on the smoothness of Σ are imposed.

Schrödinger operator with δ-interaction of strength α supported on Σ

$\mathsf{H}_\alpha^\Sigma := -\Delta - \alpha\delta(x - \Sigma)$ on $\mathbb{R}^d$.

H_α^Σ models 'leaky' quantum systems; a particle is confined to Σ but the tunnelling between different parts of Σ is not neglected.

Quantum graphs and waveguides do not explain this effect.

A mathematically rigorous definition

Self-adjoint operator H_α^Σ in $L^2(\mathbb{R}^d)$ represents semibounded quadratic form $H^1(\mathbb{R}^d) \ni u \mapsto \|\nabla u\|^2_{\mathbb{R}^d} - \alpha\|u|_\Sigma\|^2_\Sigma$; here $u|_\Sigma$ – the restriction of u onto Σ.

Physical applications

Physical applications

Quantum mechanics

(i) Mathematical models for mesoscopic systems.

(ii) Atomic Hamiltonians in strong magnetic fields.

(iii) Ultra-cold gases.

(iv) ...

Physical applications

Quantum mechanics

(i) Mathematical models for mesoscopic systems.

(ii) Atomic Hamiltonians in strong magnetic fields.

(iii) Ultra-cold gases.

(iv) ...

Electromagnetism

(i) Photonic crystals.

(ii) Dielectric media with translation invariance + high contrast; including media made of metamaterials.

Physical applications

Quantum mechanics

(i) Mathematical models for mesoscopic systems.

(ii) Atomic Hamiltonians in strong magnetic fields.

(iii) Ultra-cold gases.

(iv) ...

Electromagnetism

(i) Photonic crystals.

(ii) Dielectric media with translation invariance + high contrast; including media made of metamaterials.

Applications in future branches of physics are not excluded!

Motivation from spectral geometry

Motivation from spectral geometry

Characterise the spectrum of H_α^Σ in terms of Σ!

Motivation from spectral geometry

Characterise the spectrum of H_α^Σ in terms of Σ!

Geometrically induced bound states

- δ-interaction on the straight line $\Sigma \subset \mathbb{R}^2$ induces no bound states.
- Any 'small' deformation of Σ creates at least one bound state!

Motivation from spectral geometry

Characterise the spectrum of H_α^Σ in terms of Σ!

Geometrically induced bound states

- δ-interaction on the straight line $\Sigma \subset \mathbb{R}^2$ induces no bound states.
- Any 'small' deformation of Σ creates at least one bound state!

Isoperimetric properties

- Find the shape of Σ under some constraints optimizing a spectral quantity for H_α^Σ.
- Circle in $\mathbb{R}^2$ maximizes the ground-state eigenvalue of H_α^Σ among all loops Σ of fixed length.

Motivation from spectral geometry

Characterise the spectrum of H_α^Σ in terms of Σ!

Geometrically induced bound states

- δ-interaction on the straight line $\Sigma \subset \mathbb{R}^2$ induces no bound states.
- Any 'small' deformation of Σ creates at least one bound state!

Isoperimetric properties

- Find the shape of Σ under some constraints optimizing a spectral quantity for H_α^Σ.
- Circle in $\mathbb{R}^2$ maximizes the ground-state eigenvalue of H_α^Σ among all loops Σ of fixed length.

Spectra and curvatures

Asymptotic behaviour of eigenvalues of H_α^Σ as $\alpha \to \infty$ is governed by the curvatures of Σ, *etc.*

Asymptotically flat surfaces

Asymptotically flat surfaces

Full characterisation of $\sigma(\mathsf{H}_\alpha^\Sigma)$ for general Σ – very difficult task!

Asymptotically flat surfaces

Full characterisation of $\sigma(\mathsf{H}_\alpha^\Sigma)$ for general Σ – very difficult task!

$$\boxed{\text{general surfaces} \supset \text{asymptotically flat surfaces}}$$

Asymptotically flat surfaces

Full characterisation of $\sigma(\mathsf{H}_\alpha^\Sigma)$ for general Σ – very difficult task!

$$\boxed{\text{general surfaces} \supset \text{asymptotically flat surfaces}}$$

Asymptotically flat = unbounded surface with vanishing curvatures at ∞.

Asymptotically flat: local deformation of the plane.
Not asymptotically flat: graph of $x \mapsto \sin x$.

Asymptotically flat surfaces

Full characterisation of $\sigma(\mathsf{H}_\alpha^\Sigma)$ for general Σ – very difficult task!

$$\boxed{\text{general surfaces} \supset \text{asymptotically flat surfaces}}$$

Asymptotically flat = unbounded surface with vanishing curvatures at ∞.

Asymptotically flat: local deformation of the plane.
Not asymptotically flat: graph of $x \mapsto \sin x$.

Basic spectral properties

- Typically, $\sigma_{\mathrm{ess}}(\mathsf{H}_\alpha^\Sigma) = [-\alpha^2/4, \infty)$; each case needs a separate proof.
- $\sigma_{\mathrm{d}}(\mathsf{H}_\alpha^\Gamma) = \varnothing$ for Γ straight line in $\mathbb{R}^2$ or plane in $\mathbb{R}^3$.
- $\sigma_{\mathrm{d}}(\mathsf{H}_\alpha^\Sigma) \neq \varnothing$ for $\Sigma =$ "a small deformation" of Γ & extra assumption α large in $\mathbb{R}^3$.

Asymptotically flat surfaces

Full characterisation of $\sigma(\mathsf{H}_\alpha^\Sigma)$ for general Σ – very difficult task!

$$\boxed{\text{general surfaces} \supset \text{asymptotically flat surfaces}}$$

Asymptotically flat $=$ unbounded surface with vanishing curvatures at ∞.

Asymptotically flat: local deformation of the plane.
Not asymptotically flat: graph of $x \mapsto \sin x$.

Basic spectral properties

- Typically, $\sigma_{\mathrm{ess}}(\mathsf{H}_\alpha^\Sigma) = [-\alpha^2/4, \infty)$; each case needs a separate proof.
- $\sigma_{\mathrm{d}}(\mathsf{H}_\alpha^\Gamma) = \varnothing$ for Γ straight line in $\mathbb{R}^2$ or plane in $\mathbb{R}^3$.
- $\sigma_{\mathrm{d}}(\mathsf{H}_\alpha^\Sigma) \neq \varnothing$ for $\Sigma =$ "a small deformation" of Γ & extra assumption α large in $\mathbb{R}^3$.

Open problem: for α small in $\mathbb{R}^3$.

Asymptotically flat surfaces

Full characterisation of $\sigma(\mathsf{H}_\alpha^\Sigma)$ for general Σ – very difficult task!

$$\boxed{\text{general surfaces} \supset \text{asymptotically flat surfaces}}$$

Asymptotically flat $=$ unbounded surface with vanishing curvatures at ∞.

Asymptotically flat: local deformation of the plane.
Not asymptotically flat: graph of $x \mapsto \sin x$.

Basic spectral properties

- Typically, $\sigma_{\mathrm{ess}}(\mathsf{H}_\alpha^\Sigma) = [-\alpha^2/4, \infty)$; each case needs a separate proof.
- $\sigma_{\mathrm{d}}(\mathsf{H}_\alpha^\Gamma) = \varnothing$ for Γ straight line in $\mathbb{R}^2$ or plane in $\mathbb{R}^3$.
- $\sigma_{\mathrm{d}}(\mathsf{H}_\alpha^\Sigma) \neq \varnothing$ for $\Sigma =$ "a small deformation" of Γ & extra assumption α large in $\mathbb{R}^3$.

Open problem: for α small in $\mathbb{R}^3$.

Circular conical surfaces

Circular conical surfaces

Full characterisation of $\sigma(\mathsf{H}_\alpha^\Sigma)$ for asymptotically flat Σ – still a hard task!

Circular conical surfaces

Full characterisation of $\sigma(\mathrm{H}_\alpha^\Sigma)$ for asymptotically flat Σ – still a hard task!

$\boxed{\text{asymptotically flat surfaces} \supset \text{circular conical surfaces}}$

Circular conical surfaces

Full characterisation of $\sigma(\mathrm{H}_\alpha^\Sigma)$ for asymptotically flat Σ – still a hard task!

$$\boxed{\text{asymptotically flat surfaces} \supset \text{circular conical surfaces}}$$

Opening angle $\phi \in (0, \pi/2]$

$$\Sigma_\phi := \{(x_1, \dots, x_d) \in \mathbb{R}^d : x_d^2 = \cot^2\phi(x_1^2 + x_2^2 + \dots + x_{d-1}^2), x_d > 0\}$$

Circular conical surfaces

Full characterisation of $\sigma(\mathsf{H}_\alpha^\Sigma)$ for asymptotically flat Σ – still a hard task!

$$\boxed{\text{asymptotically flat surfaces} \supset \text{circular conical surfaces}}$$

Opening angle $\phi \in (0, \pi/2]$

$$\Sigma_\phi := \{(x_1, \dots, x_d) \in \mathbb{R}^d : x_d^2 = \cot^2\phi(x_1^2 + x_2^2 + \dots + x_{d-1}^2), x_d > 0\}$$

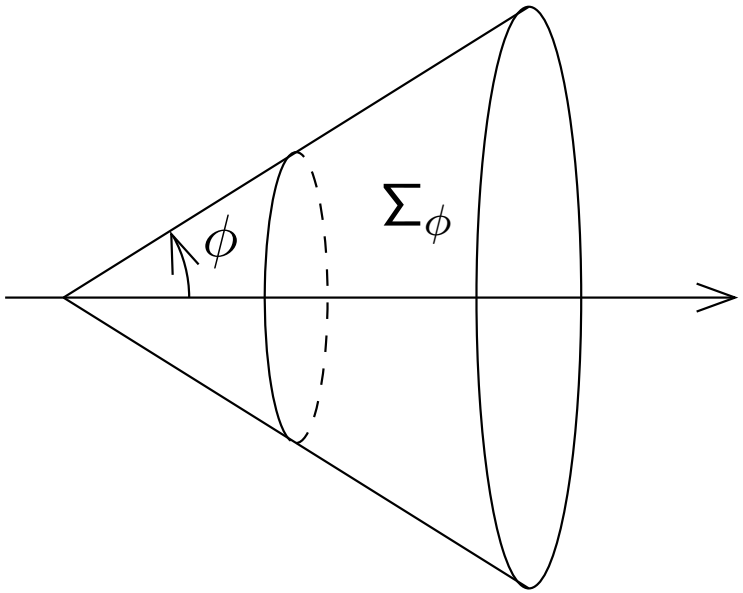

$$\sigma(\mathsf{H}_\alpha^{\Sigma_\phi}) = \tfrac{\alpha^2}{4}\sigma(\mathsf{H}_2^{\Sigma_\phi})$$

$$\mathsf{H}_\phi := \mathsf{H}_2^{\Sigma_\phi}$$

$$\sigma(\mathsf{H}_\phi) = ?$$

Outline

Continuous spectrum

Continuous spectrum

Theorem (Behrndt-Exner-L-14, $d = 3$)

$\sigma_{\mathrm{ess}}(\mathsf{H}_\phi) = [-1, \infty)$.

Continuous spectrum

Theorem (Behrndt-Exner-L-14, $d = 3$)

$\sigma_{\mathrm{ess}}(\mathsf{H}_\phi) = [-1, \infty)$.

Variables can be almost separated far away from the vertex of $\Sigma_\phi \Rightarrow$
$\sigma_{\mathrm{ess}}(\mathsf{H}_\phi) = \sigma_{\mathrm{ess}}(-\Delta_{\mathbb{R}^3} - 2\delta(x - \mathbb{R}^2)) = [-1, \infty)$.

Continuous spectrum

Theorem (Behrndt-Exner-L-14, $d = 3$)

$\sigma_{\mathrm{ess}}(\mathsf{H}_\phi) = [-1, \infty)$.

Variables can be almost separated far away from the vertex of $\Sigma_\phi \Rightarrow$
$\sigma_{\mathrm{ess}}(\mathsf{H}_\phi) = \sigma_{\mathrm{ess}}(-\Delta_{\mathbb{R}^3} - 2\delta(x - \mathbb{R}^2)) = [-1, \infty)$.

Making this observation rigorous

- $\sigma_{\mathrm{ess}}(\mathsf{H}_\phi) \supset [-1, \infty)$ – Weyl's singular sequences.
- $\sigma_{\mathrm{ess}}(\mathsf{H}_\phi) \subset [-1, \infty)$ – Neumann bracketing.

Continuous spectrum

Theorem (Behrndt-Exner-L-14, $d = 3$)

$\sigma_{\mathrm{ess}}(\mathsf{H}_\phi) = [-1, \infty)$.

Variables can be almost separated far away from the vertex of $\Sigma_\phi \Rightarrow$
$\sigma_{\mathrm{ess}}(\mathsf{H}_\phi) = \sigma_{\mathrm{ess}}(-\Delta_{\mathbb{R}^3} - 2\delta(x - \mathbb{R}^2)) = [-1, \infty)$.

Making this observation rigorous

- $\sigma_{\mathrm{ess}}(\mathsf{H}_\phi) \supset [-1, \infty)$ – Weyl's singular sequences.
- $\sigma_{\mathrm{ess}}(\mathsf{H}_\phi) \subset [-1, \infty)$ – Neumann bracketing.

Theorem (Bruneau-Popoff-15, $d > 3$)

$\sigma_{\mathrm{ess}}(\mathsf{H}_\phi) = [-1, \infty)$.

Different method of the proof, our method is also applicable.

Discrete spectrum

Discrete spectrum

Theorem (Behrndt-Exner-L-14, $d = 3$)

$\#\sigma_{\mathrm{d}}(\mathsf{H}_\phi) = \infty$ *if* $\phi \in (0, \pi/2)$ *and* $\#\sigma_{\mathrm{d}}(\mathsf{H}_\phi) = 0$ *if* $\phi = \pi/2$.

These eigenvalues accumulate to $E = -1$.

Discrete spectrum

Theorem (Behrndt-Exner-L-14, $d = 3$)

$\#\sigma_{\mathrm{d}}(\mathsf{H}_\phi) = \infty$ *if* $\phi \in (0, \pi/2)$ *and* $\#\sigma_{\mathrm{d}}(\mathsf{H}_\phi) = 0$ *if* $\phi = \pi/2$.

These eigenvalues accumulate to $E = -1$.

Proof via construction of test functions & min-max principle

- Use functions which are employed in Brezis-Marcus-97 to show sharpness of Hardy inequality.
- The strategy goes back to the proof of $\#\sigma_{\mathrm{d}} = \infty$ for $_2$He in Kato-51.

Discrete spectrum

Theorem (Behrndt-Exner-L-14, $d = 3$)

$\#\sigma_{\mathrm{d}}(\mathsf{H}_\phi) = \infty$ *if* $\phi \in (0, \pi/2)$ *and* $\#\sigma_{\mathrm{d}}(\mathsf{H}_\phi) = 0$ *if* $\phi = \pi/2$.

These eigenvalues accumulate to $E = -1$.

Proof via construction of test functions & min-max principle

- Use functions which are employed in Brezis-Marcus-97 to show sharpness of Hardy inequality.
- The strategy goes back to the proof of $\#\sigma_{\mathrm{d}} = \infty$ for ${}_2\mathrm{He}$ in Kato-51.

Theorem (L-Ourmieres-Bonafos-16, $d > 3$)

$\sigma(\mathsf{H}_\phi) = \sigma_{\mathrm{ess}}(\mathsf{H}_\phi) = [-1, \infty)$ *and* $\#\sigma_{\mathrm{d}}(\mathsf{H}_\phi) = 0$.

Discrete spectrum

Theorem (Behrndt-Exner-L-14, $d = 3$)

$\#\sigma_{\mathrm{d}}(\mathsf{H}_\phi) = \infty$ *if* $\phi \in (0, \pi/2)$ *and* $\#\sigma_{\mathrm{d}}(\mathsf{H}_\phi) = 0$ *if* $\phi = \pi/2$.

These eigenvalues accumulate to $E = -1$.

Proof via construction of test functions & min-max principle

- Use functions which are employed in Brezis-Marcus-97 to show sharpness of Hardy inequality.
- The strategy goes back to the proof of $\#\sigma_{\mathrm{d}} = \infty$ for ${}_2\mathrm{He}$ in Kato-51.

Theorem (L-Ourmieres-Bonafos-16, $d > 3$)

$\sigma(\mathsf{H}_\phi) = \sigma_{\mathrm{ess}}(\mathsf{H}_\phi) = [-1, \infty)$ *and* $\#\sigma_{\mathrm{d}}(\mathsf{H}_\phi) = 0$.

Proof relies on rotational invariance of Σ_ϕ & separation of variables

- $\sigma(\mathsf{H}_\phi) = \cup_{m=0}^{\infty} \sigma(\mathsf{H}_{\phi,m})$; $\mathsf{H}_{\phi,m}$ – fibre operators on $\mathbb{R}^2_+$.
- $\inf \sigma(\mathsf{H}_{\phi,m}) \geq \inf \sigma(-\Delta_{\mathbb{R}^2} - 2\delta(x - \mathbb{R})) = -1$.

Monotonicity of eigenvalues ($d = 3$)

Monotonicity of eigenvalues ($d = 3$)

Eigenvalues of H_ϕ repeated with multiplicities

$$E_1(\mathrm{H}_\phi) \leq E_2(\mathrm{H}_\phi) \leq \cdots \leq E_k(\mathrm{H}_\phi) \leq \cdots < -1$$

Monotonicity of eigenvalues ($d = 3$)

Eigenvalues of H_ϕ repeated with multiplicities

$E_1(\mathsf{H}_\phi) \leq E_2(\mathsf{H}_\phi) \leq \cdots \leq E_k(\mathsf{H}_\phi) \leq \cdots < -1$

Theorem (L-Ourmieres-Bonafos-16)

$(0, \frac{\pi}{2}) \ni \phi \mapsto E_k(\mathsf{H}_\phi)$ *are non-decreasing functions.*

Monotonicity of eigenvalues ($d = 3$)

Eigenvalues of H_ϕ repeated with multiplicities

$E_1(\mathsf{H}_\phi) \leq E_2(\mathsf{H}_\phi) \leq \cdots \leq E_k(\mathsf{H}_\phi) \leq \cdots < -1$

Theorem (L-Ourmieres-Bonafos-16)

$(0, \frac{\pi}{2}) \ni \phi \mapsto E_k(\mathsf{H}_\phi)$ *are non-decreasing functions.*

As the cone becomes more and more flat the eigenvalues move up.

Monotonicity of eigenvalues ($d = 3$)

Eigenvalues of H_ϕ repeated with multiplicities

$E_1(\mathsf{H}_\phi) \le E_2(\mathsf{H}_\phi) \le \cdots \le E_k(\mathsf{H}_\phi) \le \cdots < -1$

Theorem (L-Ourmieres-Bonafos-16)

$(0, \frac{\pi}{2}) \ni \phi \mapsto E_k(\mathsf{H}_\phi)$ *are non-decreasing functions.*

As the cone becomes more and more flat the eigenvalues move up.

Method of the proof

- $E_k(\mathsf{H}_\phi)$ is expressible via its Rayleigh quotient.
- Geometric transforms $\Rightarrow$ monotonicity of Rayleigh quotients follows from monotonicity of $\tan\phi$.

Monotonicity of eigenvalues ($d = 3$)

Eigenvalues of H_ϕ repeated with multiplicities

$E_1(\mathsf{H}_\phi) \le E_2(\mathsf{H}_\phi) \le \cdots \le E_k(\mathsf{H}_\phi) \le \cdots < -1$

Theorem (L-Ourmieres-Bonafos-16)

$(0, \frac{\pi}{2}) \ni \phi \mapsto E_k(\mathsf{H}_\phi)$ *are non-decreasing functions.*

As the cone becomes more and more flat the eigenvalues move up.

Method of the proof

- $E_k(\mathsf{H}_\phi)$ is expressible via its Rayleigh quotient.
- Geometric transforms $\Rightarrow$ monotonicity of Rayleigh quotients follows from monotonicity of $\tan\phi$.

Proving that $\phi \mapsto E_k(\mathsf{H}_\phi)$ is strictly increasing requires a different method.

Absence of positive embedded eigenvalues

Absence of positive embedded eigenvalues

Definition

Eigenvalues inside continuous spectrum are called ***embedded****.*

Absence of positive embedded eigenvalues

Definition

Eigenvalues inside continuous spectrum are called ***embedded****.*

In some applications it is important to exclude them.

Absence of positive embedded eigenvalues

Definition

Eigenvalues inside continuous spectrum are called ***embedded****.*

In some applications it is important to exclude them.

Proposition

There are no eigenvalues of H_ϕ *embedded into* $(0, \infty)$*.*

Absence of positive embedded eigenvalues

Definition

Eigenvalues inside continuous spectrum are called ***embedded****.*

In some applications it is important to exclude them.

Proposition

There are no eigenvalues of H_ϕ *embedded into* $(0,\infty)$*.*

Existence of $E \in (0,\infty)$ such that $H_\phi\psi = E\psi$ for $\psi \in L^2(\mathbb{R}^d)$ contradicts to ***Rellich theorem*** for conical domains Dhia-Fliss-Hazard-Tonnoir-16.

Absence of positive embedded eigenvalues

Definition

Eigenvalues inside continuous spectrum are called ***embedded****.*

In some applications it is important to exclude them.

Proposition

There are no eigenvalues of H_ϕ *embedded into* $(0,\infty)$*.*

Existence of $E \in (0,\infty)$ such that $H_\phi\psi = E\psi$ for $\psi \in L^2(\mathbb{R}^d)$ contradicts to ***Rellich theorem*** for conical domains Dhia-Fliss-Hazard-Tonnoir-16.

Open question

Absence of eigenvalues of H_ϕ embedded in $(-1,0]$.

Outline

Eigenvalue counting function

Eigenvalue counting function

Definition

$\mathcal{N}_{-1-E}(\mathrm{H}_\phi) =$ *number of eigenvalues of* H_ϕ *below the point* $-1-E$.

Eigenvalue counting function

Definition

$\mathcal{N}_{-1-E}(\mathsf{H}_\phi) =$ *number of eigenvalues of* H_ϕ *below the point* $-1-E$.

$$\boxed{\mathcal{N}_{-1-E}(\mathsf{H}_\phi) := \#\{k \in \mathbb{N} \colon E_k(\mathsf{H}_\phi) < -1-E\}.}$$

Eigenvalue counting function

Definition

$\mathcal{N}_{-1-E}(\mathsf{H}_\phi) =$ *number of eigenvalues of* H_ϕ *below the point* $-1-E$.

$$\boxed{\mathcal{N}_{-1-E}(\mathsf{H}_\phi) := \#\{k \in \mathbb{N} \colon E_k(\mathsf{H}_\phi) < -1-E\}.}$$

Behaviour of $\mathcal{N}_{-1-E}(\mathsf{H}_\phi)$ is interesting for $d = 3$

- $\#\sigma_{\mathrm{d}}(\mathsf{H}_\phi) = \infty \Rightarrow \lim_{E\to 0+} \mathcal{N}_{-1-E}(\mathsf{H}_\phi) = \infty$.
- How fast is $\mathcal{N}_{-1-E}(\mathsf{H}_\phi)$ growing?

Eigenvalue counting function

Definition

$\mathcal{N}_{-1-E}(\mathsf{H}_\phi) =$ *number of eigenvalues of* H_ϕ *below the point* $-1-E$.

$$\boxed{\mathcal{N}_{-1-E}(\mathsf{H}_\phi) := \#\{k \in \mathbb{N} \colon E_k(\mathsf{H}_\phi) < -1-E\}.}$$

Behaviour of $\mathcal{N}_{-1-E}(\mathsf{H}_\phi)$ is interesting for $d = 3$

- $\#\sigma_{\mathrm{d}}(\mathsf{H}_\phi) = \infty \Rightarrow \lim_{E\to 0+} \mathcal{N}_{-1-E}(\mathsf{H}_\phi) = \infty$.
- How fast is $\mathcal{N}_{-1-E}(\mathsf{H}_\phi)$ growing?

- Behrndt-Exner-L-14 – estimate for $\mathcal{N}_{-1-E}(\mathsf{H}_\phi)$ from one side.
- Aim of L-Ourmieres-Bonafos-16 – to obtain more on $\mathcal{N}_{-1-E}(\mathsf{H}_\phi)$.

Eigenvalue counting function

Definition

$\mathcal{N}_{-1-E}(\mathsf{H}_\phi) =$ *number of eigenvalues of* H_ϕ *below the point* $-1-E$.

$$\boxed{\mathcal{N}_{-1-E}(\mathsf{H}_\phi) := \#\{k \in \mathbb{N} \colon E_k(\mathsf{H}_\phi) < -1-E\}.}$$

Behaviour of $\mathcal{N}_{-1-E}(\mathsf{H}_\phi)$ is interesting for $d = 3$

- $\#\sigma_{\mathrm{d}}(\mathsf{H}_\phi) = \infty \Rightarrow \lim_{E\to 0+} \mathcal{N}_{-1-E}(\mathsf{H}_\phi) = \infty$.
- How fast is $\mathcal{N}_{-1-E}(\mathsf{H}_\phi)$ growing?

- Behrndt-Exner-L-14 – estimate for $\mathcal{N}_{-1-E}(\mathsf{H}_\phi)$ from one side.
- Aim of L-Ourmieres-Bonafos-16 – to obtain more on $\mathcal{N}_{-1-E}(\mathsf{H}_\phi)$.

Exact order of growth for $\mathcal{N}_{-1-E}(\mathsf{H}_\phi)$ is called spectral asymptotics.

Main theorem on spectral asymptotics

Main theorem on spectral asymptotics

Theorem (L-Ourmiéres-Bonafos-16)

$\mathcal{N}_{-1-E}(\mathsf{H}_\phi) \sim \frac{\cot\phi}{4\pi}|\ln E|$ *as* $E \to 0+$.

Main theorem on spectral asymptotics

Theorem (L-Ourmiéres-Bonafos-16)

$\mathcal{N}_{-1-E}(\mathsf{H}_\phi) \sim \frac{\cot\phi}{4\pi}|\ln E|$ *as* $E \to 0+$.

$\mathsf{S}_c = -\frac{\mathrm{d}^2}{\mathrm{d}x^2} - \frac{c}{x^2}$ on $(1,\infty)$ + Dirichlet BC at $x = 1$

Main theorem on spectral asymptotics

Theorem (L-Ourmiéres-Bonafos-16)

$\mathcal{N}_{-1-E}(\mathsf{H}_\phi) \sim \frac{\cot\phi}{4\pi}|\ln E|$ *as* $E \to 0+$.

$\mathsf{S}_c = -\frac{\mathrm{d}^2}{\mathrm{d}x^2} - \frac{c}{x^2}$ on $(1,\infty)$ + Dirichlet BC at $x = 1$

Spectral properties of S_c (Kirsch-Simon-87)

- $\sigma_{\mathrm{ess}}(\mathsf{S}_c) = [0,\infty)$.
- $\#\sigma_{\mathrm{d}}(\mathsf{S}_c) = \infty$ for $c > 1/4$.
- $\mathcal{N}_{-E}(\mathsf{S}_c) = \#\{k \in \mathbb{N}\colon E_k(\mathsf{S}_c) < -E\} \sim \frac{1}{2\pi}\sqrt{c - \frac{1}{4}}|\ln E|$,

Main theorem on spectral asymptotics

Theorem (L-Ourmiéres-Bonafos-16)

$\mathcal{N}_{-1-E}(\mathsf{H}_\phi) \sim \frac{\cot\phi}{4\pi}|\ln E|$ *as* $E \to 0+$.

$\mathsf{S}_c = -\frac{\mathrm{d}^2}{\mathrm{d}x^2} - \frac{c}{x^2}$ on $(1,\infty)$ + Dirichlet BC at $x = 1$

Spectral properties of S_c (Kirsch-Simon-87)

- $\sigma_{\mathrm{ess}}(\mathsf{S}_c) = [0,\infty)$.
- $\#\sigma_{\mathrm{d}}(\mathsf{S}_c) = \infty$ for $c > 1/4$.
- $\mathcal{N}_{-E}(\mathsf{S}_c) = \#\{k \in \mathbb{N}\colon E_k(\mathsf{S}_c) < -E\} \sim \frac{1}{2\pi}\sqrt{c - \frac{1}{4}}|\ln E|$,

Spectral asymptotics of H_ϕ and of S_c are related

$\mathcal{N}_{-1-E}(\mathsf{H}_\phi) \sim \mathcal{N}_{-E}(\mathsf{S}_{1/(4\sin^2\phi)}) \sim \frac{1}{2\pi}\sqrt{\frac{1}{4\sin^2\phi} - \frac{1}{4}}|\ln E| = \frac{\cot\phi}{4\pi}|\ln E|$.

Main theorem on spectral asymptotics

Theorem (L-Ourmiéres-Bonafos-16)

$\mathcal{N}_{-1-E}(\mathsf{H}_\phi) \sim \frac{\cot\phi}{4\pi}|\ln E|$ *as* $E \to 0+$.

$\mathsf{S}_c = -\frac{\mathrm{d}^2}{\mathrm{d}x^2} - \frac{c}{x^2}$ on $(1,\infty)$ + Dirichlet BC at $x = 1$

Spectral properties of S_c (Kirsch-Simon-87)

- $\sigma_{\mathrm{ess}}(\mathsf{S}_c) = [0,\infty)$.
- $\#\sigma_{\mathrm{d}}(\mathsf{S}_c) = \infty$ for $c > 1/4$.
- $\mathcal{N}_{-E}(\mathsf{S}_c) = \#\{k \in \mathbb{N}\colon E_k(\mathsf{S}_c) < -E\} \sim \frac{1}{2\pi}\sqrt{c - \frac{1}{4}}|\ln E|$,

Spectral asymptotics of H_ϕ and of S_c are related

$\mathcal{N}_{-1-E}(\mathsf{H}_\phi) \sim \mathcal{N}_{-E}(\mathsf{S}_{1/(4\sin^2\phi)}) \sim \frac{1}{2\pi}\sqrt{\frac{1}{4\sin^2\phi} - \frac{1}{4}}|\ln E| = \frac{\cot\phi}{4\pi}|\ln E|$.

The proof is much more complicated!

Proof via domain decomposition methods

Proof via domain decomposition methods

Construction of energy-dependent comparison operators

$$\mathsf{H}^{-}_{\phi,E} \leq \mathsf{H}_{\phi} \leq \mathsf{H}^{+}_{\phi,E}$$

Proof via domain decomposition methods

Construction of energy-dependent comparison operators

$\mathsf{H}^-_{\phi,E} \le \mathsf{H}_\phi \le \mathsf{H}^+_{\phi,E}$

$$\boxed{\mathcal{N}_{-1-E}(\mathsf{H}^-_{\phi,E}) \ge \mathcal{N}_{-1-E}(\mathsf{H}_\phi) \ge \mathcal{N}_{-1-E}(\mathsf{H}^+_{\phi,E})}.$$

Proof via domain decomposition methods

Construction of energy-dependent comparison operators

$\mathsf{H}^-_{\phi,E} \le \mathsf{H}_\phi \le \mathsf{H}^+_{\phi,E}$

$$\boxed{\mathcal{N}_{-1-E}(\mathsf{H}^-_{\phi,E}) \ge \mathcal{N}_{-1-E}(\mathsf{H}_\phi) \ge \mathcal{N}_{-1-E}(\mathsf{H}^+_{\phi,E})}.$$

Very technical estimates for $\mathcal{N}_{-1-E}(\mathsf{H}^\pm_{\phi,E})$

$$\frac{\cot\phi}{4\pi} \le \liminf_{E\to 0+} \frac{\mathcal{N}_{-1-E}(\mathsf{H}^+_{\phi,E})}{|\ln E|} \le \limsup_{E\to 0+} \frac{\mathcal{N}_{-1-E}(\mathsf{H}^-_{\phi,E})}{|\ln E|} \le \frac{\cot\phi}{4\pi}.$$

Proof via domain decomposition methods

Construction of energy-dependent comparison operators

$\mathsf{H}^-_{\phi,E} \le \mathsf{H}_\phi \le \mathsf{H}^+_{\phi,E}$

$$\boxed{\mathcal{N}_{-1-E}(\mathsf{H}^-_{\phi,E}) \ge \mathcal{N}_{-1-E}(\mathsf{H}_\phi) \ge \mathcal{N}_{-1-E}(\mathsf{H}^+_{\phi,E})}.$$

Very technical estimates for $\mathcal{N}_{-1-E}(\mathsf{H}^\pm_{\phi,E})$

$$\frac{\cot\phi}{4\pi} \le \liminf_{E\to 0+} \frac{\mathcal{N}_{-1-E}(\mathsf{H}^+_{\phi,E})}{|\ln E|} \le \limsup_{E\to 0+} \frac{\mathcal{N}_{-1-E}(\mathsf{H}^-_{\phi,E})}{|\ln E|} \le \frac{\cot\phi}{4\pi}.$$

Main difficulties

To find a domain decomposition for $\mathsf{H}^\pm_{\phi,E}$ and to estimate $\mathcal{N}_{-1-E}(\mathsf{H}^\pm_{\phi,E})$.

Maya-pyramid-like tiling

Maya-pyramid-like tiling

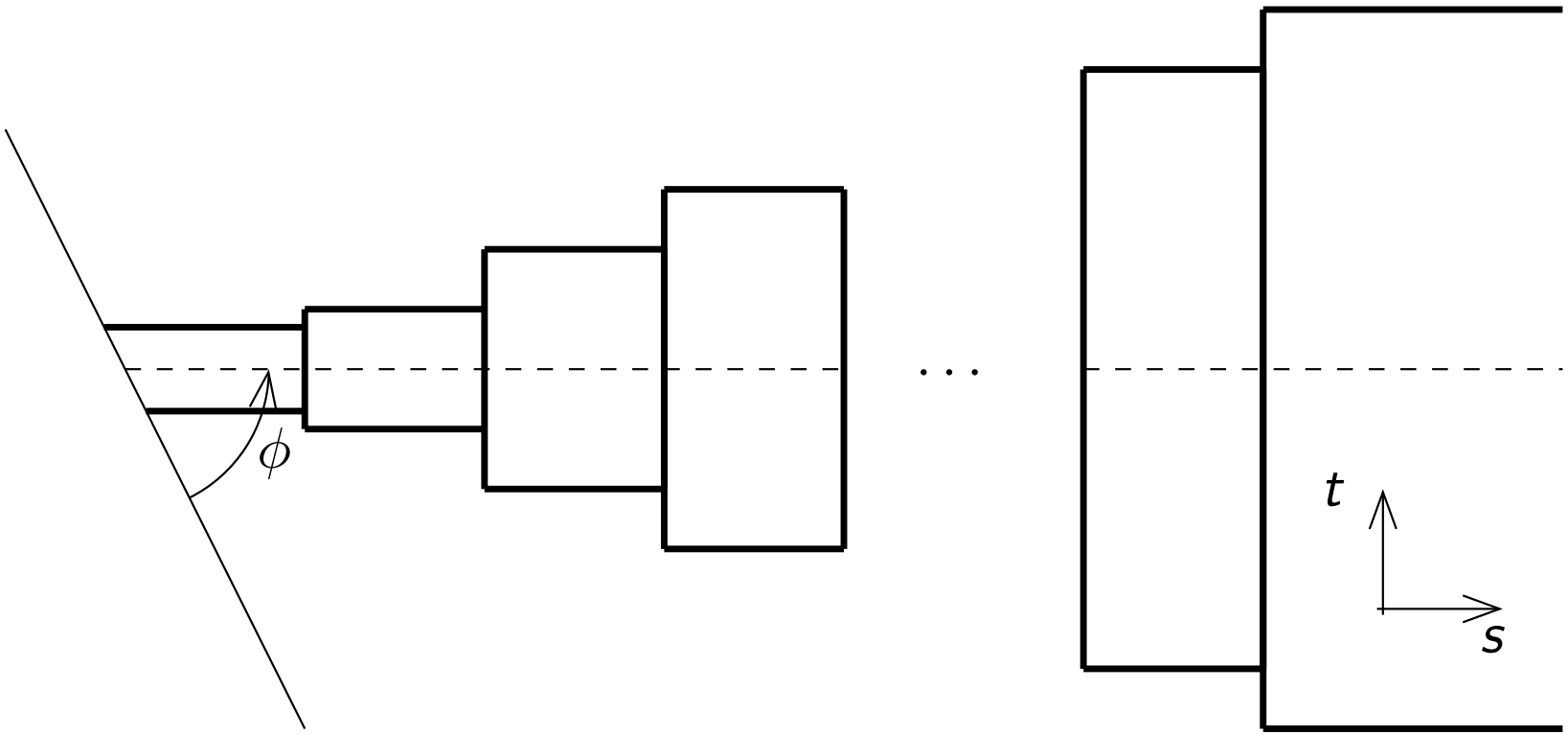

To get full decomposition rotate the figure around the sloped line. This decomposition is used for $\mathrm{H}^{-}_{\phi,E}$

Outline

Definition of general conical surfaces

Definition of general conical surfaces

circular conical surface $\subset$ general conical surface

Definition of general conical surfaces

circular conical surface $\subset$ general conical surface

Definition

- $\mathcal{T}$ – C^2-*smooth loop on the unit sphere* $\mathbb{S}^2$.
- $\Sigma(\mathcal{T}) := \{r\mathcal{T} : r > 0\}$ – *conical surface with base* $\mathcal{T}$.

Definition of general conical surfaces

circular conical surface $\subset$ general conical surface

Definition

- $\mathcal{T}$ – C^2-*smooth loop on the unit sphere* $\mathbb{S}^2$.
- $\Sigma(\mathcal{T}) := \{r\mathcal{T} : r > 0\}$ – *conical surface with base* $\mathcal{T}$.

Circular conical surface $= \Sigma(\mathcal{T})$ with $\mathcal{T}$ being a circle on $\mathbb{S}^2$.

Definition of general conical surfaces

circular conical surface $\subset$ general conical surface

Definition

- $\mathcal{T}$ – C^2-*smooth loop on the unit sphere* $\mathbb{S}^2$.
- $\Sigma(\mathcal{T}) := \{r\mathcal{T} : r > 0\}$ – *conical surface with base* $\mathcal{T}$.

Circular conical surface $= \Sigma(\mathcal{T})$ with $\mathcal{T}$ being a circle on $\mathbb{S}^2$.

$\Sigma(\mathcal{T})$

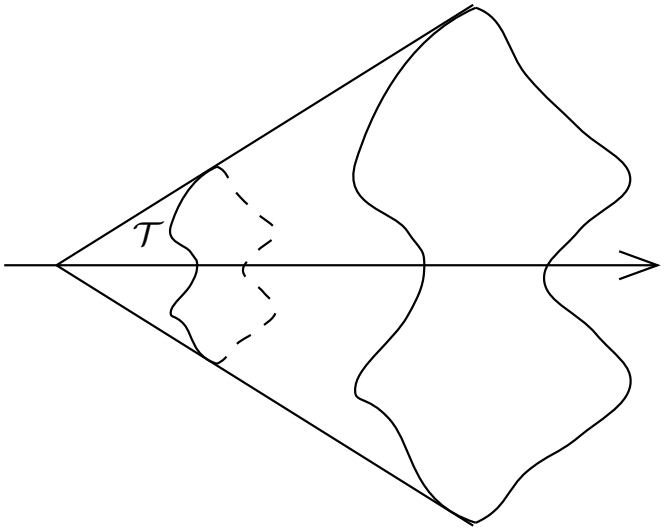

$$\mathsf{H}_{\mathcal{T}} := \mathsf{H}_2^{\Sigma(\mathcal{T})}$$

Qualitative spectral properties

Qualitative spectral properties

Theorem (Bruneau-Popoff-15)

$\sigma_{\mathrm{ess}}(\mathsf{H}_{\mathcal{T}}) = [-1, \infty)$

Qualitative spectral properties

Theorem (Bruneau-Popoff-15)

$\sigma_{\mathrm{ess}}(\mathsf{H}_{\mathcal{T}}) = [-1, \infty)$

$\inf \sigma_{\mathrm{ess}}(\mathsf{H}_{\mathcal{T}}) < -1$ if $\mathcal{T}$ has corner points; *e.g.* a polygon on $\mathbb{S}^2$.

Qualitative spectral properties

Theorem (Bruneau-Popoff-15)

$\sigma_{\mathrm{ess}}(\mathsf{H}_{\mathcal{T}}) = [-1, \infty)$

$\inf \sigma_{\mathrm{ess}}(\mathsf{H}_{\mathcal{T}}) < -1$ if $\mathcal{T}$ has corner points; *e.g.* a polygon on $\mathbb{S}^2$.

Theorem (Exner-L-15)

$\sigma_{\mathrm{d}}(\mathsf{H}_{\mathcal{T}}) \neq \varnothing$ *if* $|\mathcal{T}| < 2\pi$.

Open Question: $\#\sigma_{\mathrm{d}}(\mathsf{H}_{\mathcal{T}}) = \infty$ as for circular case?

Qualitative spectral properties

Theorem (Bruneau-Popoff-15)

$\sigma_{\mathrm{ess}}(\mathsf{H}_{\mathcal{T}}) = [-1, \infty)$

$\inf \sigma_{\mathrm{ess}}(\mathsf{H}_{\mathcal{T}}) < -1$ if $\mathcal{T}$ has corner points; *e.g.* a polygon on $\mathbb{S}^2$.

Theorem (Exner-L-15)

$\sigma_{\mathrm{d}}(\mathsf{H}_{\mathcal{T}}) \neq \varnothing$ *if* $|\mathcal{T}| < 2\pi$.

Open Question: $\#\sigma_{\mathrm{d}}(\mathsf{H}_{\mathcal{T}}) = \infty$ as for circular case?

If $|\mathcal{T}| = 2\pi$ then $\sigma_{\mathrm{d}}(\mathsf{H}_{\mathcal{T}}) = \varnothing$ for $\mathcal{T}$ being equator of $\mathbb{S}^2$.

Open Question: $|\mathcal{T}| \geq 2\pi$, $\mathcal{T}$ not equator, $\sigma_{\mathrm{d}}(\mathsf{H}_{\mathcal{T}}) \neq \varnothing$?

Isoperimetric inequality

Isoperimetric inequality

Optimization problem

$\mathcal{T} \mapsto E_1(\mathsf{H}_{\mathcal{T}}) = \max! +$ constraint $|\mathcal{T}| = L \in (0, 2\pi) \qquad (\star)$

Isoperimetric inequality

Optimization problem

$\mathcal{T} \mapsto E_1(\mathsf{H}_{\mathcal{T}}) = \max! +$ constraint $|\mathcal{T}| = L \in (0, 2\pi) \qquad (\star)$

Theorem (Exner-L-15)

The optimizer for the problem $(\star)$ *is a circle on the unit sphere.*

Isoperimetric inequality

Optimization problem

$\mathcal{T} \mapsto E_1(\mathsf{H}_{\mathcal{T}}) = \max! +$ constraint $|\mathcal{T}| = L \in (0, 2\pi) \qquad (\star)$

Theorem (Exner-L-15)

The optimizer for the problem $(\star)$ *is a circle on the unit sphere.*

Circular cone maximizes the 1st eigenvalue among all cones with fixed base length!

Isoperimetric inequality

Optimization problem

$\mathcal{T} \mapsto E_1(\mathsf{H}_{\mathcal{T}}) = \max! +$ constraint $|\mathcal{T}| = L \in (0, 2\pi) \qquad (\star)$

Theorem (Exner-L-15)

The optimizer for the problem $(\star)$ *is a circle on the unit sphere.*

Circular cone maximizes the 1st eigenvalue among all cones with fixed base length!

This theorem belongs to a family of optimization results

Most famous: the ball minimizes the 1st eigenvalue of Dirichlet Laplacian among domains of fixed volume (Faber-23, Krahn-25).

Isoperimetric inequality: method of the proof

Isoperimetric inequality: method of the proof

$\mathcal{C}, \mathcal{T} \subset \mathbb{S}^2$, $|\mathcal{C}| = |\mathcal{T}| \in (0, 2\pi)$, $\mathcal{C}$ – a circle. We need to prove

$$\boxed{E_1(\mathsf{H}_{\mathcal{T}}) \leq E_1(\mathsf{H}_{\mathcal{C}})}$$

Isoperimetric inequality: method of the proof

$\mathcal{C}, \mathcal{T} \subset \mathbb{S}^2$, $|\mathcal{C}| = |\mathcal{T}| \in (0, 2\pi)$, $\mathcal{C}$ – a circle. We need to prove

$$\boxed{E_1(\mathsf{H}_{\mathcal{T}}) \leq E_1(\mathsf{H}_{\mathcal{C}})}$$

Birman-Schwinger principle

Spectral analysis of $\mathsf{H}_{\mathcal{C}}$, $\mathsf{H}_{\mathcal{T}}$ reduces to integral equations on $\Sigma(\mathcal{C})$, $\Sigma(\mathcal{T})$.

Isoperimetric inequality: method of the proof

$\mathcal{C}, \mathcal{T} \subset \mathbb{S}^2$, $|\mathcal{C}| = |\mathcal{T}| \in (0, 2\pi)$, $\mathcal{C}$ – a circle. We need to prove

$$\boxed{E_1(\mathsf{H}_{\mathcal{T}}) \leq E_1(\mathsf{H}_{\mathcal{C}})}$$

Birman-Schwinger principle

Spectral analysis of $\mathsf{H}_{\mathcal{C}}$, $\mathsf{H}_{\mathcal{T}}$ reduces to integral equations on $\Sigma(\mathcal{C})$, $\Sigma(\mathcal{T})$.

Next step inspired by Exner-Harrell-Loss-06

(i) $E_1(\mathsf{H}_{\mathcal{T}}) \leq E_1(\mathsf{H}_{\mathcal{C}})$ reduces to comparing two integrals expressed via:

- Green's function for the Helmholtz equation;
- $\mathcal{T}$ and $\mathcal{C}$;
- restriction of ground-state $\psi_{\mathcal{C}}$ onto $\Sigma(\mathcal{C})$; $\mathsf{H}_{\mathcal{C}}\psi_{\mathcal{C}} = E_1(\mathsf{H}_{\mathcal{C}})\psi_{\mathcal{C}}$.

(ii) Comparing integrals via mean-chord inequality (Lükő-66).

Isoperimetric inequality: method of the proof

$\mathcal{C}, \mathcal{T} \subset \mathbb{S}^2$, $|\mathcal{C}| = |\mathcal{T}| \in (0, 2\pi)$, $\mathcal{C}$ – a circle. We need to prove

$$\boxed{E_1(\mathsf{H}_{\mathcal{T}}) \leq E_1(\mathsf{H}_{\mathcal{C}})}$$

Birman-Schwinger principle

Spectral analysis of $\mathsf{H}_{\mathcal{C}}$, $\mathsf{H}_{\mathcal{T}}$ reduces to integral equations on $\Sigma(\mathcal{C})$, $\Sigma(\mathcal{T})$.

Next step inspired by Exner-Harrell-Loss-06

(i) $E_1(\mathsf{H}_{\mathcal{T}}) \leq E_1(\mathsf{H}_{\mathcal{C}})$ reduces to comparing two integrals expressed via:

- Green's function for the Helmholtz equation;
- $\mathcal{T}$ and $\mathcal{C}$;
- restriction of ground-state $\psi_{\mathcal{C}}$ onto $\Sigma(\mathcal{C})$; $\mathsf{H}_{\mathcal{C}}\psi_{\mathcal{C}} = E_1(\mathsf{H}_{\mathcal{C}})\psi_{\mathcal{C}}$.

(ii) Comparing integrals via mean-chord inequality (Lükő-66).

Key novelty: Unknown restriction of $\psi_{\mathcal{C}}$ to $\Sigma(\mathcal{C})$; only its positivity and symmetry are used.

Method applicable to truncated cones

Method applicable to truncated cones

Truncated conical surfaces

(i) $\mathcal{T}$ – C^2-smooth loop on the unit sphere $\mathbb{S}^2$.

(ii) $\Sigma(\mathcal{T}, R) := \{r\mathcal{T} : r \in (0, R)\}$ – truncated conical surface with base $\mathcal{T}$ and radius $R > 0$.

Method applicable to truncated cones

Truncated conical surfaces

(i) $\mathcal{T}$ – C^2-smooth loop on the unit sphere $\mathbb{S}^2$.

(ii) $\Sigma(\mathcal{T}, R) := \{r\mathcal{T} : r \in (0, R)\}$ – truncated conical surface with base $\mathcal{T}$ and radius $R > 0$.

$\alpha > 0$ fixed. Using our method we get in Exner-L-15

Method applicable to truncated cones

Truncated conical surfaces

(i) $\mathcal{T}$ – C^2-smooth loop on the unit sphere $\mathbb{S}^2$.

(ii) $\Sigma(\mathcal{T}, R) := \{r\mathcal{T} : r \in (0, R)\}$ – truncated conical surface with base $\mathcal{T}$ and radius $R > 0$.

$\alpha > 0$ fixed. Using our method we get in Exner-L-15

(i) Circular cone maximizes the 1st eigenvalue among all truncated cones with fixed $|\mathcal{T}|$ and R.

Method applicable to truncated cones

Truncated conical surfaces

(i) $\mathcal{T}$ – C^2-smooth loop on the unit sphere $\mathbb{S}^2$.

(ii) $\Sigma(\mathcal{T}, R) := \{r\mathcal{T} : r \in (0, R)\}$ – truncated conical surface with base $\mathcal{T}$ and radius $R > 0$.

$\alpha > 0$ fixed. Using our method we get in Exner-L-15

(i) Circular cone maximizes the 1st eigenvalue among all truncated cones with fixed $|\mathcal{T}|$ and R.

(ii) For fixed $|\mathcal{T}| = L \in (0, 2\pi]$ there exists critical radius $R_*(L)$ such that:

- circular truncated cone induces no bound states;
- any non-circular truncated cone induces at least one bound state.

What else?

What else?

Ongoing projects

- Affect of Aharonov-Bohm fields (Krejčiřík-L-Ourmieres-Bonafos)
- Eigenvalue asymptotics as $\phi \to \pi/2-$ (L-Kondej)

What else?

Ongoing projects

- Affect of Aharonov-Bohm fields (Krejčiřík-L-Ourmieres-Bonafos)
- Eigenvalue asymptotics as $\phi \to \pi/2-$ (L-Kondej)

Other important contributors

Bonaille-Noël, Bruneau, Dauge, Duclos, Krejčiřík, Levitin, Pankrashkin, Parnovski, Popoff, Raymond, Tater,. . . .

What else?

Ongoing projects

- Affect of Aharonov-Bohm fields (Krejčiřík-L-Ourmieres-Bonafos)
- Eigenvalue asymptotics as $\phi \to \pi/2-$ (L-Kondej)

Other important contributors

Bonaille-Noël, Bruneau, Dauge, Duclos, Krejčiřík, Levitin, Pankrashkin, Parnovski, Popoff, Raymond, Tater,. . . .

Selected topics considered by other groups

(i) Robin and magnetic cones, Dirichlet conical layers.

(ii) Asymptotics of counting function for non-circular cones.

(iii) Continuous spectrum for cones with edges.

(iv) Semi-classical methods for $\phi \to 0+$.

(v) Localization estimates for eigenfunctions.

Summary and next challenges

Summary and next challenges

Circular conical surface

Spectrum is understood on the qualitative level + spectral asymptotics.

Summary and next challenges

Circular conical surface

Spectrum is understood on the qualitative level + spectral asymptotics.

General conical surfaces

Spectrum is only partially understood on the qualitative level + isoperimetric inequality.

Summary and next challenges

Circular conical surface

Spectrum is understood on the qualitative level + spectral asymptotics.

General conical surfaces

Spectrum is only partially understood on the qualitative level + isoperimetric inequality.

Still a lot of open questions for conical surfaces.

Other classes of surfaces less investigated

- parabolic surfaces.
- hyperbolic surfaces.
- radially periodic surfaces.
- $\mathbb{Z}^d$-periodic surfaces.
- ...

References

- J. Behrndt, P. Exner, and V. Lotoreichik, Schrödinger operators with δ-interactions supported on conical surfaces, *J. Phys. A: Math. Theor.* **47** (2014), 355202 (16pp).
- P. Exner and V. Lotoreichik, A spectral isoperimetric inequality for cones, *arXiv:1512.01970*.
- V. Lotoreichik and T. Ourmières-Bonafos, On the bound states of Schrödinger operators with δ-interactions on conical surfaces, *to appear in Comm. in Partial Differential Equations*, *arXiv:1510.05623*.

Thank you!

Děkuji za pozornost!